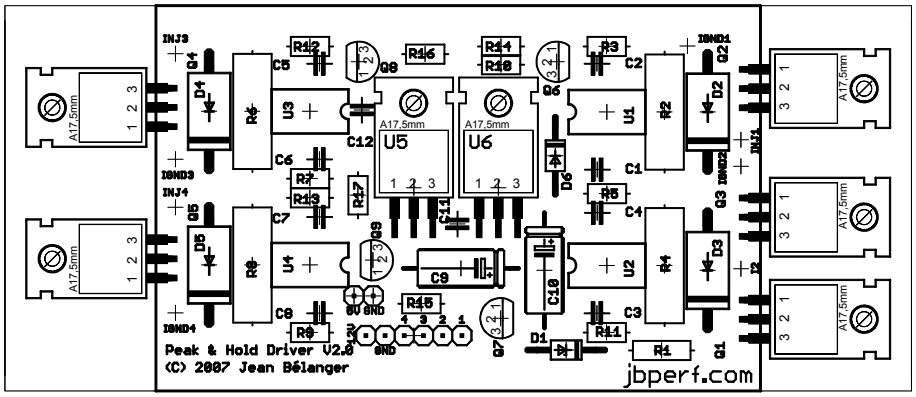
Peak & Hold Driver V2.0
(C) 2007 Jean Bélanger
jbperf.com
INJ3
INJ4
IGND1
IGND2
IGND3
IGND4
INJ1
INJ2
U1
U2
U3
U4
U5
U6
R1
R2
R3
R4
R5
R6
R7
R8
R9
R10
R11
R12
R13
R14
R15
R16
R17
C1
C2
C3
C4
C5
C6
C7
C8
C9
C10
C11
C12
D1
D2
D3
D4
D5
D6
Q1
Q2
Q3
Q4
Q5
Q6
Q7
Q8
Q9
A17.5mm
5V
GND